LIPPERT COMPONENTS®

he contents of this manual are proprietary and copyright protected by Lippert Components, Inc. ("LCI").
I prohibits the copying or dissemination of portions of this manual unless prior written consent from an
orized LCI representative has been provided. Any unauthorized use shall void any applicable warranty. The
information contained in this manual is subject to change without notice and at the sole
discretion of LCI. Revised editions are available for free download from www.lci1.com.

574.537.8900 | customerservice@lci1.com | lci1.com

GO FARTHER.

Trailer Axle (2K-7K) Owner's Manua

Please recycle all obsolete materials. For all concerns or questions, please contact Lippert Components, Inc.

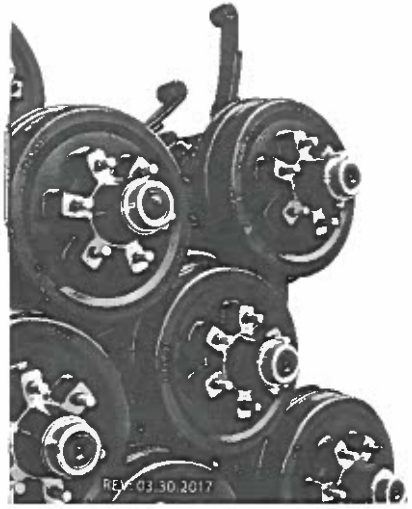

REV 03.30.2017

LIPPERT COMPONENTS®

574.537.8900 | customerservice@lci1.com | lci1.com

ble of Contents

roduction 3

fety Information 3

Break-in Period for Electric Drum Brakes 4

bs/Drums/Bearings 5

Hub Removal 5

Brake Drum Inspection 6

Bearing Inspection 6

Bearing Lubrication - Oil 7

Bearing Lubrication - Grease 8

Seal Inspection and Replacement 8

Bearing Adjustment/Hub Replacement 10

ctric Brakes 11

How to Use Lippert Electric Brakes Properly 12

neral Maintenance - Electric Brakes 13

Brake Adjustment 13

Lubricate Brakes 14

Clean and Inspect Brakes 14

Magnets 15

Shoes and Linings 15

Axle and Suspension Installation 16

Suspension Systems 16

Double-Eye Leaf Springs 16

Torsion Suspension System 18

Inspection 19

Suspension Replacement 20

Wheel Selection 21

Torque Requirements 21

Wheels 23

Tires 23

Introduction to Troubleshooting 25

Troubleshooting 25

Measuring Voltage 25

Measuring Amperage 27

Maintenance Schedule 30

Wiring Diagram 31

Warranty 32

Notes 34

troduction

nbining years of experience in the trailer frame and recreational vehicle ustry with the newest and most innovative technology, Lippert Components, introduces it's newest addition, The Axle and Running Gear Division.

following publication is designed to give the customer an easy-to-lerstand operation and service manual to provide useful and important rmation. The quality of the Lippert name and the finest materials utilized in production of the Axles and Running Gear provide you with hubs, brakes, ms and spindles that make trailering and braking the finest in the industry.

lity comes threefold in Lippert Components, Inc.:

The finest quality materials.
The latest technology and design.
The quality standards maintained from materials to final assembly.

hree points provide the customer with the best product they can possibly and the satisfaction of knowing they can trust the equipment on which have spent their hard-earned money.

ert Components, Inc. thanks you for purchasing our Axles and Running r. When you speak of Lippert Components, Inc., our quality stands beside

fety Information

⚠WARNING

"WARNING" symbol above is a sign that a service or maintenance procedure a safety risk involved and may cause serious injury or death if not performed ly and within the parameters set forth in this manual.

ays wear eye protection when performing service or maintenance to the cle. Other safety equipment to consider would be hearing protection, es and possibly a full face shield, depending on the nature of the service.

Safety Information

This manual provides general service and maintenance procedures. Many variables can change the circumstances of the service procedure, i.e. the degree of difficulty involved in the service operation and the ability level of the individual performing the operation. This manual cannot begin to plot out procedures for every possibility, but will provide the general instructions for effectively servicing the vehicle. In the event the skill level required or the procedure is too difficult, a certified technician should be consulted before performing the necessary service. Failure to correctly service the vehicle may result in voiding the warranty, inflicting injury or even death.

The owner's manual for your trailer may have more procedures for service and maintenance.

Break-in Period for Electric Drum Brakes

The break-in period is a typical phenomenon with drum brakes and especially electric drum brakes. Electric drum brakes will require a break-in period to achieve full performance. This break-in period applies for new axles and any time new brake shoes and/or magnets are installed as part of regular maintenance.

Lippert Components has found through extensive brake testing that the break-in period for our drum brakes can range from 20 to 50 brake applications.

Brakes can be seated in by applying approximately 8-10 volts to the trailer brakes at an initial speed of 40 mph and allowing the truck/trailer combination to slow down to 20 or 25 mph. For best results, do not use truck brakes during this procedure. The trailer brakes will seat in faster by using them to stop both the truck and trailer. The easiest method is to apply the trailer brakes using the manual activation lever located on the in-cab brake controller. Care must be taken to not overheat the lining material, therefore brake applications conducted at one mile intervals will suffice. The driver should feel a noticeable difference in the brake performance during this period, sometimes in as few as 10 applications. After 50 applications, the brake lining material will be fully cured from the heat and develop close to 100% contact with the brake drum surface.

fety Information

break-in period not only seats the shoe lining material but also seats in brake electromagnets. During the break-in period, the linings will wear at a er rate than they do after they are seated in.

TE: Brakes should be manually adjusted after the first 200 miles of operation periodically thereafter, approx. 3,000 mile intervals.

bs/Drums/Bearings

TE: It is normal to have a small residual amount of grease on the exterior new hub. Most of the time, simply wiping off the residual grease is an ropriate solution. However, if there is noticeable diminished braking capability rease continues to weep, the hub should be checked by a qualified service vider. It is not normal for a hub to continue to weep grease after its initial allation. Excess grease can coat the brake pads, magnets and braking aces inside of the hub.

o Removal

emove the hub assembly for inspection, maintenance or service, follow the 6) steps below:

⚠WARNING

ift trailer by the frame and never the axle or suspension. Do not o under trailer unless it is properly supported by jack stands. nsupported trailers can fall causing death or serious injury.

Lift trailer and support it per manufacturer's requirements.

Remove the wheel.

Remove the grease cap by prying the edge out of the hub. If equipped with oil lubrication, unscrew oil cap using a 2-1/2" socket. Let oil drain into pan.

Pull the cotter pin from the castle nut and remove the outer spindle nut.

Remove the spindle washer.

Hubs/Drums/Bearings

6. Pull the hub off the spindle. Do not let the outer bearing cone fall free of the assembly. The inner bearing cone will be contained by the seal and will not fall out.

NOTE: Brakes may need to be adjusted or backed off to remove drum from spindle.

NOTE: A gear puller may be necessary to remove hub from spindle.

Brake Drum Inspection

The brake shoes contact the drum surface and the magnet contacts the armature. These surfaces are subject to wear and should be inspected periodically.

The drum surface should be re-machined if wear is more than .030" or out of round by more than .015". The drum should be replaced if scoring or wear is greater than .090".

The inner surface of the brake drum that contacts the brake magnet is the armature surface. If the armature surface is scored or worn unevenly, it should not be machined more than .030". The magnets should be replaced whenever the armature surface is refaced and vice versa.

NOTE: Ensure that the wheel bearing cavities are clean and free of contamination before reinstalling bearing and seals. Resurfacing procedures can produce metal chips and dust that can contaminate the wheel bearings and cause failure.

Drum	Maximum Re-bore Diameter
7"	7.09"
10"	10.09"
12"	12.09"

Bearing Inspection

Wash all grease and oil from the bearing cone using a suitable solvent. Dry the bearing with a clean, lint-free cloth and inspect each roller completely. If any pitting, spalling, or corrosion is present, then the bearing must be replaced. The bearing cup inside the hub must be inspected.

)TE: Bearings must always be replaced in sets of one cone and one cup.

⚠ CAUTION

Always wear eye protection when servicing the axle, brakes, hubs, springs and wheels. Failure to wear eye protection may result in serious injury.

llow the procedure below to replace the bearing cup:

- Place hub on a flat surface with bearing cup on the bottom.
- With brass drift punch, lightly tap around the small end of the cup to push it out.
- Clean the hub bore. Replace the cup by tapping it back in with the brass drift punch. Cup should be seated against the retaining shoulder in the hub.

)TE: Consult Bearing Replacement Chart for proper replacement bearings.

)TE: Replacing the bearing cup is a very precise process. The cup must be rfectly seated when replaced. If the cup is not seated correctly, damage to the embly may not be covered by the warranty. Consult Lippert Components, prior to replacing bearing and bearing cup. The trailer should be taken to a tified service center for this work to be done.

⚠ CAUTION

Do not mix lithium, calcium, sodium or barium complex greases. Chemical compatibility problems may occur. If you are changing from one chemical grease to another, be sure all old grease is removed prior to applying new grease. If the old grease is not removed completely, chemical compatibility may result in component failure or damage.

aring Lubrication - Oil

our axles are equipped with oil lubricated hubs, then your lubrication cedure is to periodically fill the hub with a high quality hypoid gear oil to level indicated on the clear plastic oil cap. The oil can be filled through the ber plug hole in the cap.

Bearing Lubrication - Grease

Bearing grease should be replaced every 36,000 miles or 12 months, whichever comes first. Remove all old grease from wheel hub and bearings first. Bearings should be packed by machine if possible. Packing bearings by machine is preferable; however, packing by hand is a viable alternative.

Follow these procedures to repack bearings by hand:

1. Place grease into the palm of your hand **(Fig. 1)**.
2. Press widest end of bearing into the outer edge of the grease pile, forcing grease into the inner area of the bearing between two adjacent rollers **(Fig. 2)**.
3. Repeat this process while turning bearing from roller to roller until all rollers are coated.
4. Apply a light coat of grease into the bearing cup surface.
5. Reassemble bearing into cup.

Seal Inspection and Replacement

Always check the seal to make sure that it is not damaged, nicked, cracked or torn and is in good working order. If there is any question of condition, replace the seal.

NOTE: LCI recommends replacing the seal each time the hub is removed.

Procedure to replace seal:

1. Pull seal from the hub with a seal puller. Never push the seal out with the bearing. The bearing may get damaged.
2. Apply a PERMATEX sealant to the outside of the new seal.

NOTE: Do not use PERMATEX on rubber encased seals.

3. Tap the new seal into place using a clean, hardwood block **(Fig. 3)**.

NOTE: When installing a new oil seal, be sure side marked "AIR SIDE" is away from bearing cone.

ig. 1

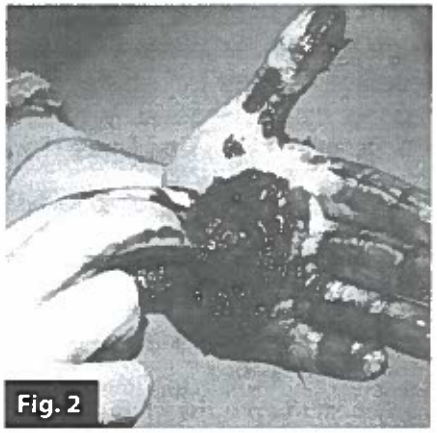

Fig. 2

ecommended Wheel Bearing Grease Specifications	
ickener Type	Lithium Complex
opping Point	230°C (446°F) Minimum
nsistency	NLGI No. 2
dditives	EP, Corrosion, & Oxidation Inhibitors
se Oil	Solvent Refined Petroleum Oil
se Oil Viscosity	@40°C (104°F) 150cSt (695 SUS) Minimum
scosity Index	80 Minimum
ur Point	-10°C (14°F) Minimum

pproved Sources	
obil Oil	Mobilgrease HP
xon/Standard	Ronex MP
ndal Refining Co.	Kendall L-427
hland Oil Co.	Valvoline Val-plex EP Grease
nnzoil Prod. Co.	Premium Wheel Bearing Grease 707L

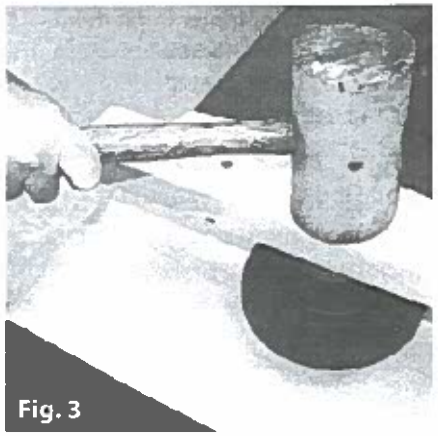

Fig. 3

Fig. 4

Bearing Adjustment/Hub Replacement

To adjust bearings or replace removed hub, follow procedures below:

1. Place hub, bearing, washers and castle nut back on axle spindle in the reverse order from which they were removed. Castle nut should be torqued to 50 ft.-lb. Hub will rotate during this process.
2. Loosen castle nut to back off the torque.
3. Tighten castle nut finger tight until snug.
4. Insert cotter pin. If cotter pin does not line up with hole, back castle nut up slightly until pin can be inserted **(Fig. 4)**.
5. Bend cotter pin over to lock nut in place. Nut should be free to move with only the cotter pin keeping it in place.

lectric Brakes

ıe basic structure of the Electric Brakes on your trailer will resemble the brakes ı your car or tow vehicle, with one major difference; your trailer implements ı Electric Actuation system and your tow vehicle utilizes a hydraulic system. ıe Electric Braking System operates in the following order of steps: (Refer to e Electric Braking System Diagram **(Fig. 13)** and the brake diagram **(Fig. 5)** ·low to follow along).

1. Electric current is supplied to the trailer's braking system when the tow vehicle's brakes are applied.
2. From the tow vehicle's battery, the electricity flows to the brake's electromagnet.
3. When energized, the magnets are attracted to the rotating surface of the drums.
4. This moves the actuating levers in the direction the drums are turning.
5. The actuating cam at the end of the shoe forces the primary shoe out to the drum surface.
6. The force of the primary shoe actuates the secondary shoe to contact the drum.
7. The force applied to the brake drum can be increased by elevating the current flow to the magnet.

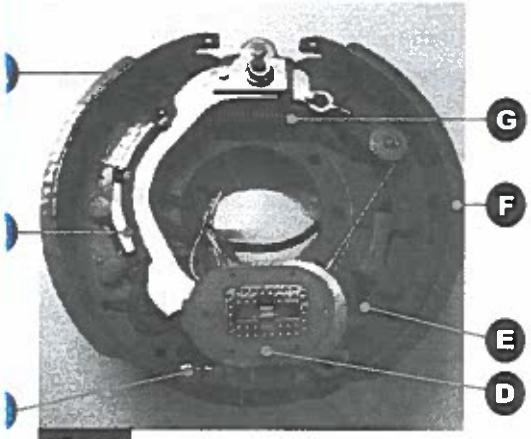

Fig. 5

Callout	Description
A	Primary Shoe
B	Actuating Lever
C	Adjuster
D	Magnet
E	Adjusting Spring
F	Secondary Shoe
G	Retracting Spring

How to Use Lippert Electric Brakes Properly

The Lippert Components, Inc. Electric Braking System is synchronized with the tow vehicle brakes. Never attempt to stop the combined load of the tow vehicle and the trailer by using either the tow vehicle brakes or the trailer brakes only. They are designed to work together.

Small manual adjustments may occasionally be necessary to accommodate changing loads and driving conditions. Synchronization of tow vehicle to trailer braking can only be accomplished by road testing. Locking up, excessive grab, or delayed application is quite often due to the lack of synchronization between the tow vehicle and the trailer being towed. High voltage (2V+), Low voltage (2V-) or improperly adjusted brakes are the most common causes of these problems and can be easily remedied.

Prior to any adjustments, your trailer brakes should be burnished-in by applying the brakes 20-30 times with a 20 m.p.h. decrease in speed, e.g. 40 m.p.h. to 20 m.p.h. Allow ample time for brakes to cool between application. This allows the brake shoes and magnets to begin seating to the brake drum.

Trailer Wire Gauge Chart

Wire Gauge and Type	Number of Axles	Length of Run
16 Ga Stranded Copper	1	N/A
14 Ga Stranded Copper	2	Under 30ft. (9.1m) from hitch to center of axles
12 Ga Stranded Copper	2 or 3	Over 30ft. (9.1m) from hitch to center of axles

rake Adjustment

⚠WARNING

Prior to testing or adjusting brakes, be sure area is clear of any persons and vehicles. Failure to perform test in a clear area may result in death or serious injury.

ppert Components, Inc. Electric Brakes are offered in a manual adjusting ıd an automatic adjusting form. If manual adjusting is needed, the following step procedure can be utilized. The brakes should be adjusted in the following anner:

1. Jack up trailer and secure on adequate capacity jack stands. Follow trailer manufacturer's recommendations for lifting and supporting the trailer. Make sure the wheel and drum rotates freely.

⚠WARNING

Lift trailer by frame and never the axle or suspension. Do not go under trailer unless it is properly supported by jack stands. Unsupported trailers can fall causing death or serious injury.

2. Remove the adjusting hole cover from the adjusting slot on the bottom of the brake backing plate.
3. With a screwdriver or standard adjusting tool, rotate the starwheel of the adjuster assembly to expand the brake shoes. Adjust the brake shoes out until the pressure of the linings against the drum makes the wheel very difficult to turn.
4. Then rotate the starwheel in the opposite direction until the wheel turns freely with a slight lining drag or approximately 10 click adjustments.

OTE: A second screwdriver will be needed to push the auto adjusting ver away from the adjuster starwheel so that the starwheel can be rotated ckward in the case of a self-adjusting brake.

5. Replace the adjusting hole cover and lower the wheel to the ground.
6. Repeat the above procedure on all brakes. For best results, the brakes should all be set at the same clearance, i.e. if you set the first brake at 10 clicks of clearance adjustment, adjust the remaining brake clearances the same amount.

Lubricate Brakes

Prior to reassembling the brake drum assembly, remember to apply a light film of white grease or an anti-seize compound on the brake anchor pin, the actuating arm bushing and pin, and the areas on the backing plate that are in contact with the brake shoes and magnet lever arm. In addition, apply a light film of grease on the actuating block mounted on the actuating arm.

Clean and Inspect Brakes

In the event the braking system encounters symptoms of improper application or failure, immediate inspection and service **MUST** be implemented. During normal use, servicing the braking system once a year is considered normal. Increased usage will require service on a regulated schedule based on 3000-6000 mile increments. As magnets and shoes become worn, they need to be changed to maintain maximum braking capability.

Be sure, when disassembling brakes for cleaning, to clean the backing plate, magnet arm, magnet and shoes. Also, make sure that any and all parts removed for cleaning are placed back into the same brake drum assembly. This is also an excellent time to check for parts that have become loose or worn.

⚠WARNING

Potential asbestos dust hazard.

Older brake linings have the potential to contain asbestos dust, which has been linked to serious or fatal illnesses. Certain precautions must be taken when servicing brakes:

1. Avoid creating and/or breathing any brake dust.
2. Do not machine, file, or grind the brake linings.
3. Remove with a damp brush or cloth. Dry brushing or compressed air will cause the dust particles to become airborne.

ieneral Maintenance - Electric Brakes

agnets

is electric braking system utilizes an electromagnet to actuate the brake shoes. ese high-quality magnets provide superior force and friction to safely and fectively stop the trailer. These magnets should be inspected and serviced on the me schedule as the rest of the axle system, at least once a year for normal use and ore often if the trailer is used extensively. Abnormal or uneven wear is a sign that e magnet needs to be replaced. Check the surface of the magnet with a straight ge to check for uneven wear. The surface of the magnet should be completely flat.

he magnet's coil is exposed in any way, even if normal wear is evident, the agnets should be replaced immediately. If the electromagnets are replaced, the um armature surface should also be refaced. If a magnet is replaced on one side of axle, it is recommended that the magnet on the opposite brake assembly also be placed to ensure even braking capacity.

gure 6 shows an Electro-Magnet with little or no wear. If there are any pronounced ps on the surface of the Electro-Magnet, the magnet should be replaced.

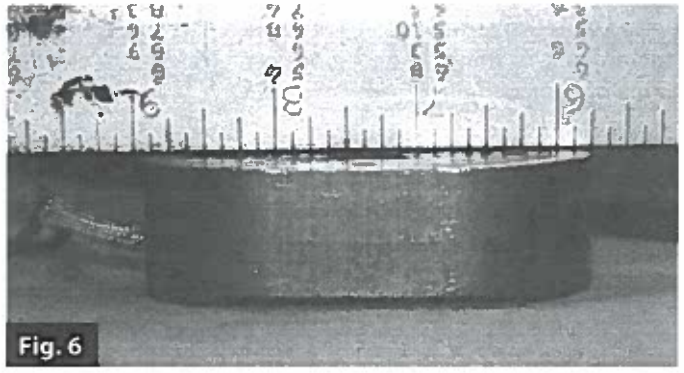

Fig. 6

oes and Linings

ings should be replaced if the material is worn to 1/16" or less. Shoes should o be replaced if they become contaminated with grease or oil or have become ored, pitted or gouged. Heat cracks are normal and rarely require attention. When olacing shoes, both shoes on the same brake and the brakes on the same axle ould all be replaced at the same time, once again ensuring even braking capacity.

er replacing shoes and linings, your trailer brakes should be burnished-in by plying the brakes 20-30 times with a 20 m.p.h. decrease in speed, e.g. 40 m.p.h. to m.p.h. Allow ample time for brakes to cool between application. This allows the ake shoes and magnets to begin seating to the brake drum.

Axle and Suspension Installation

The single most important portion of axle installation is parallel alignment of the trailer axle(s) to the tow vehicle or drive axle(s). Parallel installation allows for correct and safe control, prolonged tread life and will all but eliminate dog-tracking. Proper alignment is most readily achieved by measuring from the center of the trailer king pin to the center of each end of the axles.

Lippert Components, Inc. tubular axles are made of high strength steel to prevent metal fatigue and provide the best possible welding conditions. The round tubular axles allow for even and uniform structure.

⚠ CAUTION

Always wear eye protection when servicing the axle, brakes, hubs, springs and wheels. Failure to wear eye protection may result in serious injury.

Suspension Systems

The suspension systems incorporated into Lippert Components, Inc. axles are designed to provide the following benefits:

1. Attach the axle to the trailer.
2. Dampen the effects of road shock.
3. Provide stability to the trailer.

All Lippert suspension systems are available in single and multiple axle configurations. For specific or custom applications, please contact Lippert Components, Inc. Axle Division.

Double-Eye Leaf Springs

Double-eye leaf springs **(Fig. 7)** have eyes at either end of the spring assembly with nylon bushings to assist in preventing wear. U-bolts hold the springs to the axle with a plate.

articulation of this suspension occurs when the eyes rotate on the wear surfaces vided in eyes of the springs and on the equalizers. This suspension is also lable in single and multiple axle configurations. In trailers with two or more axles, additional movement is maintained by an equalizer. This feature allows for even handling from axle to axle.

ble-eye suspension systems are available on 8,000 lb. axles. Tandem and triple mounting kits are available for both 33" and 35" axle spacing.

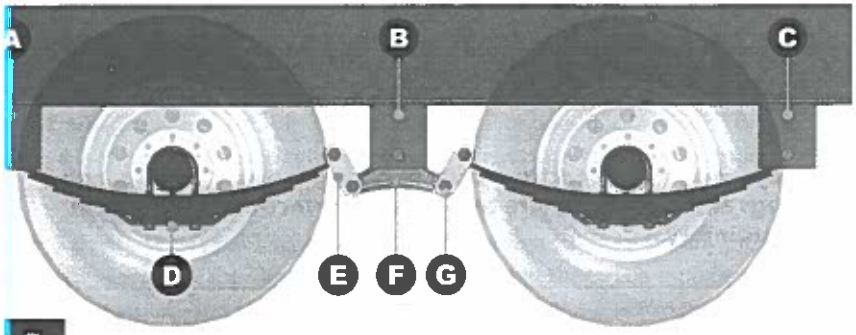

.7

er	Description
	Front Hanger
	Center Hanger
	Rear Hanger
	Tie Plate
	Shackle Link
	Equalizer
	Shackle Bolts

t Type	Axle Capacity	Maximum Torque
	2K	25 ft-lb
	3.5K with 1/2"	50 ft-lb
olts	5.2K	65 ft-lb
	6-8K	90 ft-lb
	Minimum Torque	Maximum Torque
kle Bolts	30 ft-lb	50 ft-lb

Torsion Suspension System

1. The Lippert Components, Inc. Torsion Suspension system is designed to offer superior qualities over leaf spring technology. The Lippert Components, Inc. Torsion Suspension system is bracketed to the trailer's frame and housed inside the trailer axle's tube.
2. The spindle is connected to a swing arm, the swing arm is connected to a square inner bar that is sheathed in rubber and as the swing arm rotates and experiences the torque and resistance of driving conditions, the characteristics of the rubber absorb and distribute the load providing benefit over leaf spring suspensions.
3. The Lippert Components, Inc. Torsion Suspension system requires very little attention in regards to maintenance. Normal inspection of the entire Lippert Components, Inc. Trailer Axle system can be applied to the Torsion Suspension system. See inspection procedures for system components in this manual.

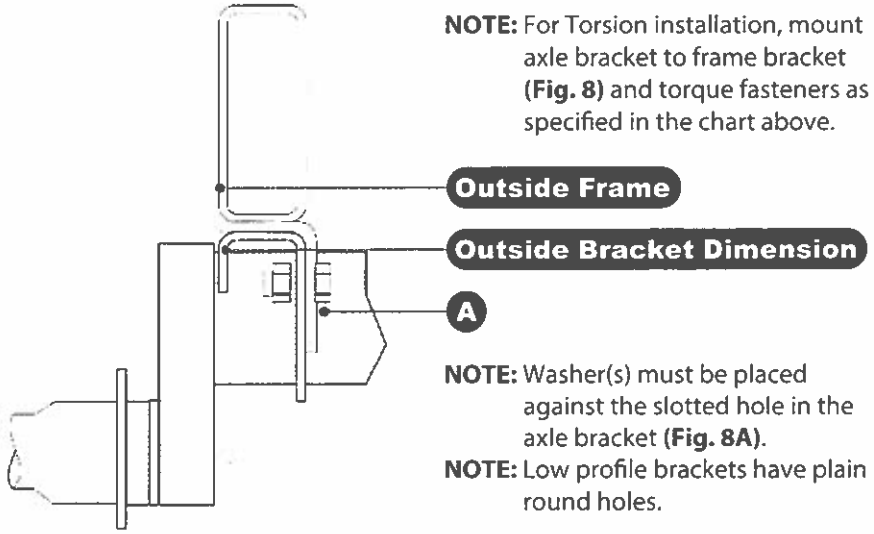

NOTE: For Torsion installation, mount axle bracket to frame bracket **(Fig. 8)** and torque fasteners as specified in the chart above.

NOTE: Washer(s) must be placed against the slotted hole in the axle bracket **(Fig. 8A)**.

NOTE: Low profile brackets have plain round holes.

Fig. 8

Torsion Axle Torque Specifications

Axle Size	Bolt Size	Torque Range
#9	1/2"	70-90 ft-lb
#10 - #13	⅝"	120-150 ft-lb

Inspection

All the components of your suspension system should be visually inspected for signs of wear, damage or loose fasteners annually or every 36,000 miles. When replacing or tightening loose fasteners, consult the Wheel Torque Requirement Chart for correct torque values.

Worn spring eye bushings or sagging or broken springs should be replaced using the following method:

1. Support the trailer with the wheels just off the ground. Follow the trailer manufacturer's recommendations for lifting and supporting the trailer.
2. After the trailer is properly supported, place a suitable block under the axle tube near the end to be repaired. This block is to support the weight of the axle only so that suspension components can be serviced or replaced.
3. Disassemble the U-bolts, nuts, and tie plates.
4. Remove the spring eye bolts and the spring.
5. If the spring eye bushings are to be replaced, press out the old bushing by hand or tapping out with a punch.
6. Free-floating nylon bushing needs no lubrication. Press the new bushing into the spring eye by hand or gently tapping it in with a bounceless rubber or plastic mallet.
7. Reinstall repaired or replaced components in reverse order.

NOTE: For multiple axle trailers, the weight of each axle must be supported as outlined in Step 2 before disassembly of any component of the suspension system.

⚠WARNING

Lift trailer by the frame and never the axle or suspension. Do not go under trailer unless it is properly supported by jack stands. Unsupported trailers can fall causing death or serious injury.

⚠CAUTION

Always wear eye protection when servicing the axle, brakes, hubs, springs and wheels. Failure to wear eye protection may result in serious injury.

If the equalizer or equalizer bushings must be replaced, follow the instructions above for lifting and supporting the trailer and then proceed as follows:

1. With both axles blocked up, remove the spring eyebolt, keeper bolt, and equalizer bolt from the equalizer to be repaired or replaced.
2. Press the old nylon bushing out of the equalizer.
3. Reassemble in reverse order.

Suspension Replacement

1. Make sure springs are on straight. Align spring eyes to front hanger. Insert spring eye bolts but do not torque at this point.
2. Assemble springs into equalizer.
3. After leveling equalizer to frame, torque equalizer nuts and spring eye nuts to a minimum of 30 ft.-lb. and a maximum of 50 ft-lb.

Vheel Selection

hen specifying or replacing your trailer wheels it is important that the wheels, es, and axle are properly matched. The following characteristics are extremely portant and should be thoroughly checked when replacement wheels are nsidered:

1. Bolt Circle. Wheels have many bolt circle variations and some are so close that it could be possible to attach an inappropriate wheel that does not match the axle hub.
2. Capacity. Wheel load capacity should match tire and trailer max. load ratings.
3. Offset. The relationship of the center line of the tire to the hub face of the axle should match any replacement. Failure to match offset may result in reducing the carrying capacity of your axle.
4. Rim Contour. Replacement wheels should be direct replacements to match the rim contour.

⚠WARNING

Use only rim contours suggested by manufacturer. Failure to use correct rim contour may cause dramatic separation of tire and wheel and could cause death or serious injury.

⚠WARNING

Attempting to modify or repair a wheel can cause unsafe conditions that may result in an explosion. Air pressure on a weakened or cracked rim can cause death or serious injury.

orque Requirements

is extremely important to apply and maintain proper wheel mounting torque your trailer axle. Torque wrenches assure the proper amount of torque is ing applied to a fastener. Use no other method to torque fasteners.

⚠WARNING

Proper and accurate torque must be maintained to prevent wheels from loosening, studs from cracking and/or breaking or other possible hazardous breakage resulting in death or serious injury.

Be sure to use only the fasteners matched to the cone angle of your wheel (usually 60° or 90°). The proper procedure for attaching your wheels is as follows:

1. Start all bolts or nuts by hand to prevent cross threading.
2. Tighten bolts or nuts in the following sequence (see Wheel Torque Requirement Chart below).
3. Tightening fasteners should be done in stages. Follow the recommended sequence **(Fig. 9)**, tighten fasteners per wheel torque requirements chart below.
4. Wheel nuts/bolts should be torqued before first road use and after each wheel removal. Check and re-torque after the 10 and 25 miles and again at 50 miles. A periodic check during regular service is recommended.

Wheel Torque Requirement Chart

Wheel Size	Stud Size	Torque Sequence		
		1st Stage	2nd Stage	3rd Stage
14"	1/2"	20-25 ft-lbs	50-60 ft-lbs	90-120 ft-lbs
15"	1/2"	20-25 ft-lbs	50-60 ft-lbs	90-120 ft-lbs
16"	1/2"	20-25 ft-lbs	50-60 ft-lbs	90-120 ft-lbs
16.5" x 6.75"	1/2"	20-25 ft-lbs	50-60 ft-lbs	90-120 ft-lbs
16"	9/16"	20-25 ft-lbs	60-70 ft-lbs	120-130 ft-lbs
16.5" x 6.75"	9/16"	20-25 ft-lbs	60-70 ft-lbs	120-130 ft-lbs
16" Dual and 17.5" Cone Nut	5/8"	50-60 ft-lbs	100-120 ft-lbs	190-210 ft-lbs
16" Dual and 17.5" Flange Nut	5/8"	50-60 ft-lbs	150-200 ft-lbs	275-325 ft-lbs
14.5" Demount	1/2"	Tighten sequentially to 85-95 ft-lbs		

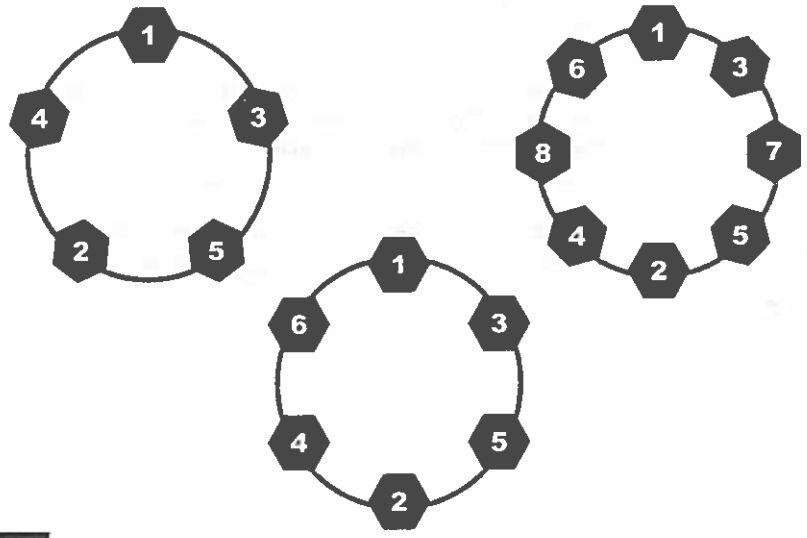

Fig. 9

ires

rior to mounting tires onto wheels, be sure the rim size and contour are pproved by the Tire and Rim Association Yearbook or the tire manufacturers atalog. In addition, confirm that the tire will carry the rated load. If the load not evenly distributed on all tires, use the tire rated for the heaviest wheel osition.

he Rubber Manufacturers Association or the tire manufacturers guidelines hould be consulted for mounting procedures.

ire inflation pressure is the most important factor in tire life. Tire pressure hould always be what is recommended by the manufacturer for the load. lways check pressure cold before operation. Do not bleed air from tires when hey are hot. Check inflation pressure weekly during use to insure maximum tire nd tread life.

he following tire wear diagnostic chart will help you pinpoint the causes and olutions of tire wear problems.

OTE: Tire wear should be checked frequently because once a wear pattern becomes firmly established in a tire it is difficult to stop, even if the underlying cause is corrected.

Tire Wear Diagnostic Chart

Problem	Probable Cause	Corrective Action
Center Wear	Over-inflation	Adjust pressure to particular load per tire catalog.
Edge Wear	Under-inflation	Adjust pressure to particular load per tire catalog.
Side Wear	Loss of camber or overloading	Make sure load does not exceed axle rating. Call Lippert Service & Warranty to advise.
Toe Wear	Incorrect Toe-in	Call Lippert Service & Warranty to advise.
Cupping	Out-of-balance	Check bearing adjustment and balance tires.
Flat Spots	Wheel lockup and tire skidding	Avoid sudden stops if possible and adjust brakes.

troduction to Troubleshooting

e following section is a guideline for ensuring operation of your braking tem. The safety of you, those traveling with you and those sharing the road aramount and it starts with the ability to safely stop the tow vehicle and the ved vehicle.

oubleshooting

st brake malfunctions can be corrected by utilizing the Troubleshooting art. Mechanical failure is the most common form of malfunction, however, if brake system fails and it's not mechanical, it is usually electrical. A Voltmeter d Ammeter are essential tools to diagnose these problems.

chanical problems are mostly self-evident; something is bent or broken. nsult the Troubleshooting Chart to determine the probable cause and rective actions for a variety of issues with the braking system.

member to use only Lippert Components, Inc. replacement parts on these tems. Consult the Limited Warranty or call our Service Department for any er related issues.

easuring Voltage

e Braking System voltage is measured at the two lead wires of the magnet any brake. Use the pin probes inserted through the insulation of the lead res. To ensure that the battery is indicating a full charge, the towing vehicle gine should be running with the trailer coupler connected when checking the ltage.

ltage in the system should begin at 0 volts and, as the brake pedal of the tow hicle is applied, voltage will gradually increase to about 12 volts. If the system es not indicate at least 12 volts, problems may occur in the wiring of the tem, the battery or alternator of the tow vehicle.

en the brakes are applied, a gradual increase in voltage is preferable to a quick rease to 12 volts. A gradual increase in voltage ensures smooth and firm trailer king. A quick increase in voltage will cause the braking system to feel like the iler is grabbing too quickly

Taking a voltage reading is usually done with probes inserted into the wire connector **(Fig. 10)**.

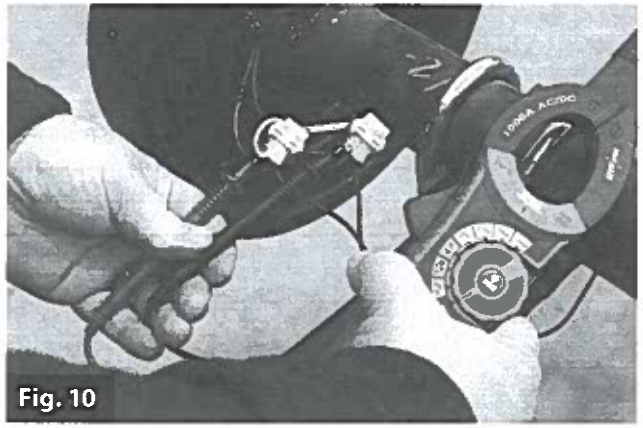

Fig. 10

Troubleshooting Chart

Problem	Probable Cause	Corrective Action
No brakes	Open circuits	Find and correct
	Short circuits	Test and correct
	Severe under-adjustment	Adjust brakes
Weak brakes	Grease or oil on magnets or linings	Clean or replace
	Corroded connections	Clean and correct cause of corrosion
	Worn linings or magnets	Replace
	Scored or grooved brake drums	Machine or replace
	Improper synchronization	Correct
	Under-adjustment	Adjust brakes
	Glazed Linings	Re-burnish or replace
Locking brakes	Under-adjustment	Adjust
	Improper synchronization	Correct
	Loose, bent or broken brake components	Test and correct
	Out-of-round brake drums	Machine or replace
	Insufficient wheel load	Adjust system resistor and synchronize
Intermittent brakes	Broken wires	Test and correct
	Loose connections	Repair or replace
	Faulty ground	Find and repair

oubleshooting Chart (continued)

oblem	Probable Cause	Corrective Action
akes pull one side	Wrong magnet lead wire color	Adjust
	Incorrect adjustment	Correct
	Grease or oil on linings or magnets	Clean or replace
	Broken wires	Find and repair
	Bad connections	Find and repair
rsh akes	Under-adjustment	Adjust
	Improper synchronization	Correct
isy akes	Under-adjustment	Adjust
	Lack of lubrication	Lubricate
	Broken components	Replace component
	Incorrect brake components	Correct
rging akes	Grease or oil on linings or magnets	Clean or replace
	Out-of-round or cracked brake drums	Machine or replace
agging akes	Over-adjustment	Readjust
	Out-of-round brake drums	Machine or replace
	Incorrect brake components	Replace
	Loose, bent or broken brake components	Replace
	Faulty breakaway switch	Repair or replace
	Loose wheel bearing adjustment	Adjust
	Bent spindle	Replace Axle

OTE: If all trailer lights and brakes do not work, check your wiring plug nnection and make sure the ball is making solid contact with the coupler at is how a trailer is grounded). Too much grease or not using dielectric ease on the ball and coupler can cause this to happen.

easuring Amperage

e Braking System amperage is the amount of current flowing through the stem when all magnets have been energized. The amperage will change oportionately with the voltage. To ensure that the battery is indicating a full arge, the towing vehicle engine should be running with the trailer coupler nnected when checking the voltage.

a resistor is used in the brake system, it must be set at zero or bypassed mpletely to obtain the maximum amperage reading. Individual amperage aw can be measured by inserting the ammeter in the line at the magnet you want to check. Disconnect one of the magnet lead wire connectors and attach the ammeter between the two wires. Consult the Amperage Chart in this section for normal amp readings.

Make sure that the wires are properly reconnected and sealed after testing is completed.

Testing for amperage can be done with probes **(Fig. 11)** or alligator clips on the leads or an amp clamp **(Fig. 12)**.

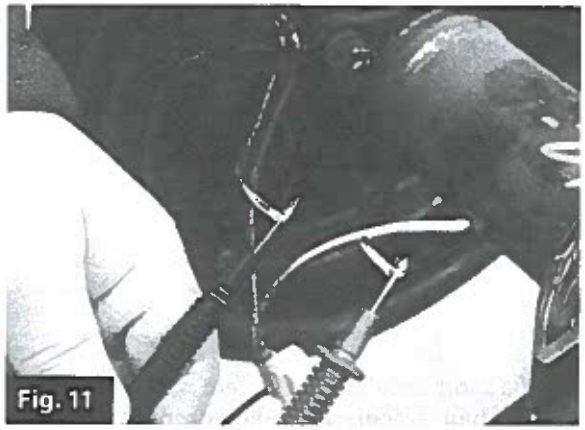

Fig. 11

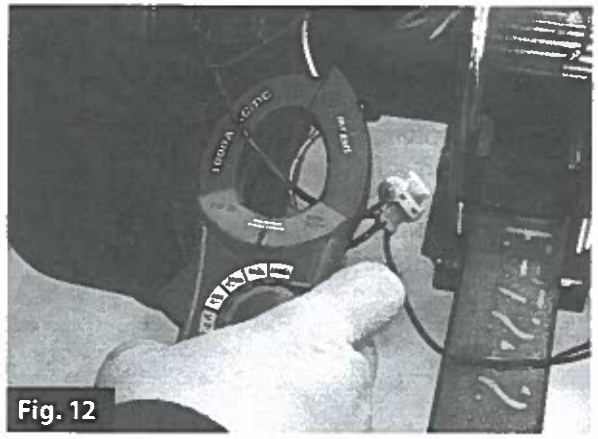

Fig. 12

ntroduction to Troubleshooting

mperage Chart

Amps/Magnet	Two Brakes	Four Brakes	Six Brakes
.0	6.0	12.0	18.0

ow or no voltage are the most common problem with the Braking System. mperage at the brakes is also a relatively common issue.

ommon causes of these conditions are:

1. Low quality electrical connections
2. Open circuits
3. Insufficient wire gauge
4. Broken wires
5. Blown fuses (fusing of brakes is not recommended)
6. Short circuits (indicated by high amperage)

ossible causes of shorts are:

1. Shorted magnet coils
2. Bare wires contacting a grounded object

inding the cause of a short circuit in the system is done by isolating one ection at a time. If the high amperage reading drops to zero by unplugging he trailer, then the short is in the trailer. If the amperage reading remains igh with all the brake magnets disconnected, the short is in the trailer wiring.

ll electrical troubleshooting procedures should start at the controller. Most complaints regarding brake harshness or malfunction are traceable o improperly adjusted or nonfunctional controllers. See your controller nanufacturer's data for proper adjustment and testing procedures. For best esults, all the connection points in the brake wiring should be sealed to prevent orrosion. Loose or corroded connectors will cause an increase in resistance which educes the voltage available for the brake magnets.

Maintenance Schedule

Item	Function Required	3,000 Miles	12 Months/36,000 Miles (Whichever comes first)
Brakes	Test that they're operational.	At every use.	
Oil Level	Check oil level in hubs, if equipped.	At every use.	
Brake Adjustment	Adjust to proper operating clearance. Not required for self-adjusting brakes.	◆	
Brake Magnets	Inspect for wear and current draw.		◆
Brake Linings and Pads	Inspect for wear or contamination.		◆
Hub/Drum and Rotors	Inspect for abnormal wear or scoring.		◆
Wheel Bearing	Inspect for corrosion or wear. Clean and repack.		◆
Seals	Inspect for leakage. Replace if removed.		◆
Springs	Inspect for wear, loss of arch.		◆
Suspension Parts	Inspect for bending, loose fasteners, wear.		◆
U-bolts	Tighten to specified torque values.		◆

Wiring Diagram

Fig. 13

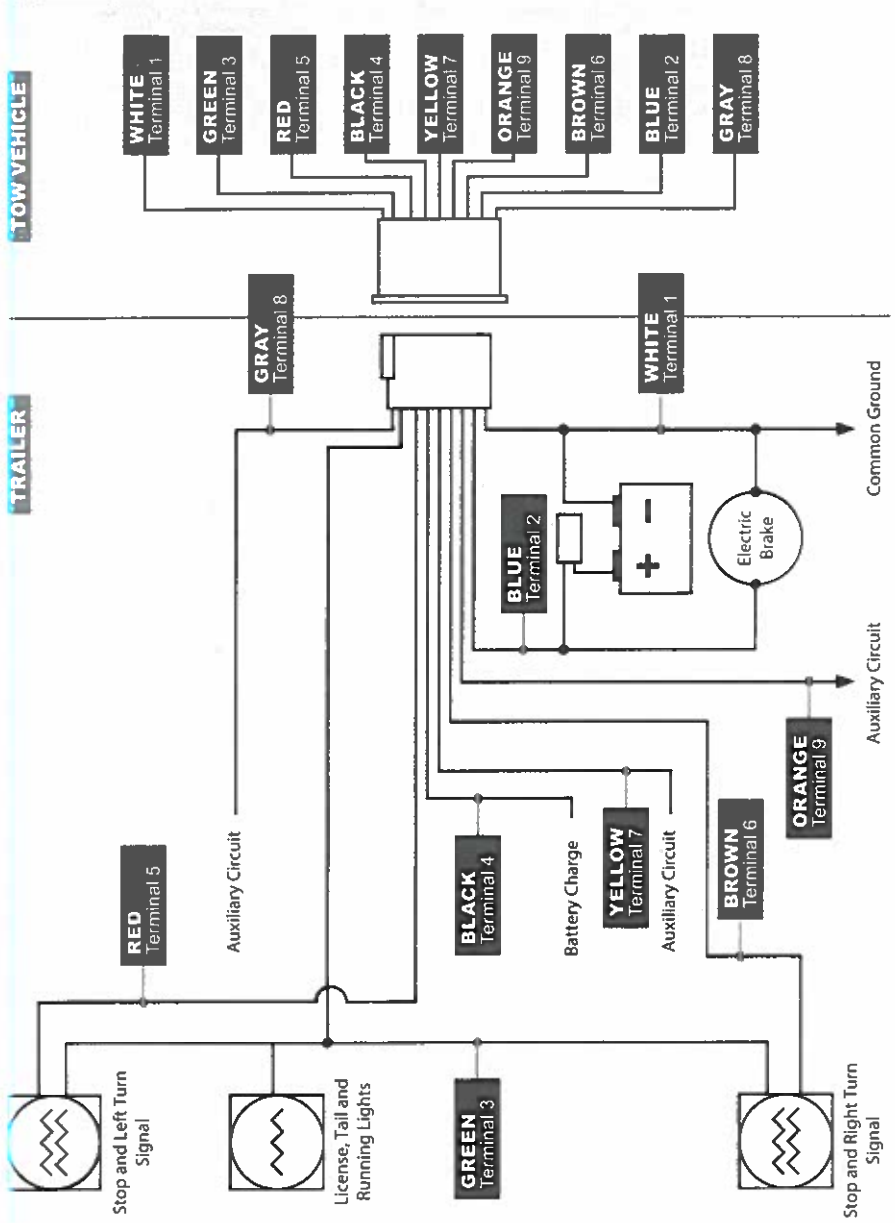

Warranty

LIPPERT COMPONENTS® AXLE LIMITED WARRANTY (NORTH AMERICAN OEM SALES)

This Axle Limited Warranty ("Warranty") outlines applicable coverage and claim procedures for Products incorporated into units or trailers retail sold after January 1, 2017, as defined herein, sold by Lippert Components, Inc. or its subsidiaries or affiliates (the direct seller being the only warrantor referenced herein as "Warrantor", "we", "us" or "our").

Coverage. Subject to these terms, we warrant ONLY to you, the original equipment manufacturer ("OEM", "you" or "your"), that the axles and suspension systems that we manufacture, distribute and/or sell to you that are not already covered by a separate written warranty from another manufacturer (the "Product(s)") will be free from defects in materials and workmanship at the time of sale. We will honor this Warranty for the applicable period from the date of retail purchase, and cover only Products sold and used in the United States and Canada. The Warranty period shall be as follows:

Limited 1 Year Warranty – grease and oil seals for all Products.

Limited 6 Year Warranty – spring axles and suspension systems.

Limited 11 Year Warranty – torsion axles.

Service. For Products having a covered defect within the Warranty period, we will, in our sole and absolute discretion, repair or replace the Product with a new or refurbished component, or provide a pro rata refund of that portion of the Product. Labor will be allowed if a designated flat rate time is outlined by us and will be limited to the published flat rate amount. There is no other warranty.

Notice. No remedy will be required or offered unless we receive written notice of a claimed defect. You must make any claim of defect, including without limitation under this Warranty, in writing, with full particulars, promptly after the defect was or reasonably should have been discovered, and in any event no later than sixty (60) days of its discovery. In the event of any accident, injury to person, damage to property, or other loss involving a Product, you must notify us in writing within thirty (30) days of the incident or within ten (10) days of notification to you, whichever is earlier. In the event of any survey, test, or inspection to be conducted on a Product, you must notify us in writing immediately so that we, at our sole election, may participate in that activity or conduct our own survey, test, or inspection in advance. Your written notice must describe the defect, provide the customer's name and address, state the location of the Product, and provide us full particulars (see below). As a condition of coverage, we must be provided access to the original Product for inspection, testing, or other work at our discretion. The Product must remain unmodified. We will not consider any claims for Products (or any components thereof) that are not in their original form. Failure to give us proper or timely notice of a claimed defect, or failure to return the defective Product, or performing any modification, self-help, or alteration of the Product, without our prior written approval, will constitute an absolute waiver and release of all your claims and rights under this Warranty.

Transferability. THIS WARRANTY IS NOT ASSIGNABLE OR TRANSFERABLE. THIS WARRANTY EXTENDS ONLY TO YOU, THE ORIGINAL OEM PURCHASER PURCHASING A PRODUCT DIRECTLY FROM WARRANTOR'S FACILITIES, AND WILL NOT BE CONSTRUED TO EXTEND TO ANY THIRD-PARTY, INCLUDING WITHOUT LIMITATION THE ULTIMATE RETAIL PURCHASER OR CONSUMER OF AN END PRODUCT. YOU MAY NOT REPRESENT TO ANYONE, INCLUDING YOUR CUSTOMER OR AN END CONSUMER THAT THIS WARRANTY EXTENDS TO THEM.

Limitations. THERE IS NO WARRANTY OF MERCHANTABILITY OR FITNESS FOR A PARTICULAR PURPOSE, TO THE FULL EXTENT DISCLAIMER IS PERMITTED BY LAW. IN ANY EVENT, ANY IMPLIED WARRANTY THAT MAY ARISE BY LAW IS LIMITED IN DURATION TO THE TERM HEREIN AND TO THE COVERED PRODUCTS. THE REPAIR, REPLACEMENT, OR REFUND PROVIDED HEREIN IS EXCLUSIVE AND IN LIEU OF ALL OTHER REMEDIES. EXCEPT AS PROVIDED IN THIS WARRANTY, ALL PRODUCTS ARE BEING SOLD "AS IS" AND "WITH ALL FAULTS." ALL RISKS AS TO PRODUCT QUALITY OR PERFORMANCE NOT CONTEMPLATED BY THIS WARRANTY WILL BE BORNE EXCLUSIVELY BY YOU, THE PURCHASER. IF A PRODUCT PROVES DEFECTIVE AFTER ITS PURCHASE, YOU, NOT US, ASSUME THE ENTIRE COST OF ALL NECESSARY SERVICING OR REPAIR THAT IS NOT COVERED UNDER THIS WARRANTY. IN NO EVENT WILL WE BE LIABLE FOR COSTS OF REMOVAL OR REINSTALLATION OF THE PRODUCTS, OR ANY EXPENSE RELATED TO REINSTALLATION. WE WILL HAVE NO LIABILITY TO ANYONE FOR CONSEQUENTIAL, SPECIAL, INCIDENTAL, INDIRECT, EXEMPLARY, OR PUNITIVE DAMAGES OF ANY KIND WHATSOEVER, INCLUDING WITHOUT LIMITATION PROPERTY DAMAGE, LOST PROFITS, LABOR COSTS, OR ANY OTHER PECUNIARY DAMAGE, WHETHER DUE TO ANY DEFECT IN THE PRODUCTS, BREACH, DELAY, NON-DELIVERY, NON-PERFORMANCE, RECALL, OR ANY OTHER REASON. ALL CLAIMS FOR NEGLIGENCE AND FOR FAILURE OF ESSENTIAL PURPOSE ARE EXPRESSLY WAIVED AND RELEASED. UNDER NO CIRCUMSTANCES WILL OUR LIABILITY FOR ANY DEFECT IN THE GOODS, WHETHER BASED ON CONTRACT, TORT, WARRANTY, OR ANY OTHER THEORY, EXCEED THE PURCHASE PRICE OF THE PRODUCTS. THERE ARE NO THIRD-PARTY BENEFICIARIES TO THE WARRANTY'S TERMS. YOU WAIVE ANY RIGHT TO A JURY TRIAL AND CLASS ACTION RELATING TO THIS WARRANTY, AND MAY NOT JOIN OR CONSOLIDATE CLAIMS AS A REPRESENTATIVE OF A CLASS ACTION OR IN A PRIVATE ATTORNEY GENERAL CAPACITY. THESE PROVISIONS PROVIDE SPECIFIC LEGAL RIGHTS AND LIMITATIONS. SOME MAY NOT APPLY BASED ON STATE OR FEDERAL LAW, AND OTHER LEGAL RIGHTS MAY EXIST.

Exclusions. This Warranty only covers the Products. Due to the intended use of our Products, any and all items and components not sold by us but attached to, incorporated into, or using our Products carry NO WARRANTY WHATSOEVER from us regardless of circumstance. We will not be liable for any defects, whether due to workmanship, materials or any other reason whatsoever, for those items and components not sold by us. This Warranty also does not cover customer instruction, installation and labor (except as provided herein), parts supplied by others, abuse, misuse,

neglect, improper installation or improper repair by anyone other than us, improper usage, overloading, accidents, unreasonable use, improper loading, improper operation, improper repair, improper maintenance, normal wear and tear, normal wear components (including bolts, nuts, shackles, and riding enhancement products) color fade, mold, mildew, corrosion, rust formation, modifications, or attempted repair by anyone other than a qualified repair facility. This Warranty does not cover chemical damage caused by acids, fuel, oil, or other chemicals. Use of our Products in or as part of a unit in a rental fleet, or for a commercial or industrial purpose, voids your rights under this Warranty. The Warranty also does not extend to and does not cover defects caused by the following:

- The connecting of brake wiring to the trailer wiring or trailer wiring to the towing vehicle wiring.
- The attachment of the axles and running gear to the chassis/frame.
- Any and all damage caused by or related to any alteration of the axle or running gear including welding supplemental brackets to the axle.
- Improper alignment.
- Unreasonable use, including failure to perform reasonable and necessary maintenance in accordance with our operations and service manuals with proof of such maintenance (including required maintenance after prolonged storage.)
- Use of an axle on a unit/trailer other than the unit/trailer to which it was originally mounted.
- Improper torque values and torquing of wheel nuts not in accordance with our operations manual.

Indemnity. You agree to indemnify and hold us, as well as our officers, agents, employees, and representatives, harmless from and against all claims, causes of action, liabilities, losses, damages, judgments, and proceedings, whether based in contract, quasi-contract, subrogation, tort, strict liability, or any other legal or equitable theory, including without limitation all expenses, costs, damages or injury to person or property, and attorney fees incident thereto, arising from or relating to your handling, storage, transportation, possession, processing, fabrication, resale, or any other activity involving the Products after delivery, or relating to any extension or attempt to extend, assign, transfer, or pass this Warranty through to anyone else. At our request, and subject to our sole discretion to choose our own counsel, you will also defend us from any such claims, causes of action, or proceedings.

Statute of Limitations. Any action, lawsuit or other proceeding, under this Warranty or otherwise, related to the Product must be commenced within one (1) year after the earlier of (a) the expiration of the applicable Warranty coverage period, (b) our alleged failure to repair the defect at issue; or (c) the date on which your claim accrues under applicable law. Unless prohibited by law, the performance of repairs will not prevent the limitations period from expiring, nor will any tolling or estoppel doctrine apply. This Warranty does not extend to future performance.

Applicable Law & Venue. This Warranty will be governed by and construed in accordance with the laws of the State of Indiana without regard to principles of conflicts of law. Any disagreement, dispute, controversy, or claim arising out of or relating to this Warranty must be submitted to binding arbitration in accordance with the Rules of the American Arbitration Association. Judgment upon the award may be entered in any court having jurisdiction thereof. In the event you bring any claim against us in violation of this Warranty or for claims waived or released under this Warranty, you agree to pay our attorney and paralegal fees and costs to defend such suit.

Modifications. We will not be liable for commitments, promises, or agreements made by any employee, agent, or dealer that is not in accordance with this Warranty. The current warranties and terms outlined on the Warrantor's website (www.lci1.com) applicable on the date of purchase take precedence over any other warranties, whether oral or written. We reserve the right to alter our warranties from time to time, as the laws and our business needs and industry change. Any conditions or exceptions that may be stated in any communication or document to us from any entity or individual, including but not limited to the retail purchaser or consumer, shall be of no effect unless specifically agreed to in writing and hand-signed by our authorized representative.

Miscellaneous. Any legally or otherwise invalid provision hereof will be considered severable, with all remaining provisions enforceable. We have all rights and remedies given to sellers by applicable law, and our rights and remedies are cumulative and may be exercised from time to time. No waiver by us of any provision of this Warranty will be effective unless in writing, nor will it operate as a novation or waiver of any other provision or affect our right to exercise thereafter any right or remedy. We will not lose any right because we have not exercised that right in the past.

For questions and claims, contact Lippert Components, Inc., Attn. Warranty Dept., 1902 West Sample Street, South Bend, Indiana 46619. The telephone number to obtain the name and address of the service and repair facility nearest you is 1-574-537-8900. You may also email your claim to customerservice@lci1.com. To process your claim, we will need the following information: vehicle identification number (VIN), date of manufacture, date of purchase, the make and full model number, pictures of alleged defect, and description of alleged defect. Please include this information with any correspondence and have this information available when you call.

*** IMPORTANT - READ ***
*** IMPORTANTE – LEA ***
*** IMPORTANT – LIRE CE DOCUMENT***

THIS SWITCH IS FOR EMERGENCY USE ONLY !!
¡EL INTERRUPTOR ES SOLAMENTE PARA EMERGENCIAS!
CE COMMUTATEUR DOIT ÊTRE UTILISÉ EN SITUATION D'URGENCE SEULEMENT!

FILE WITH YOUR VEHICLE'S MANUAL
GUARDE CON EL MANUAL DE SU VEHÍCULO
CONSERVEZ CE DOCUMENT AVEC LE MANUEL ACCOMPAGNANT VOTRE VÉHICULE

* FOR SWITCHES OR LANYARDS - IF DAMAGED OR MELTED, WARRANTY IS VOID *

PARA INTERRUPTORES O AMARRES: AL DAÑARSE O DERRETIRSE SE ANULA LA GARANTÍA

COMMUTATEURS ET CORDONS : LA GARANTIE EST NULLE SI CES COMPOSANTS SONT ENDOMMAGÉS OU FONDUS*

Your trailer is equipped with an ESCO breakaway switch. The switch is designed to operate ***only*** when the towed trailer separates from the towing vehicle. When this happens, the lanyard cable pin is pulled out of the breakaway switch. The switch will close the circuit from the trailer battery to the brakes and apply the brakes.

For the breakaway switch to operate properly, it is important that the trailer battery is sized to the brakes of the trailer, the terminal connections are clean, the battery is fully charged and the switch is installed according to the following procedure.

1. Mount the breakaway switch on a horizontal plane as close to the hitch as possible. There should be no strain or obstacles interfering with the lanyard cable connected to the tow vehicle. Make sure the tow vehicle can make sharp right and left turns without straining the lanyard cable.

2. The breakaway switch should be bolted to the trailer frame with a minimum ¼" bolt that will accept 75 lb. pull on the switch and will allow the switch to swivel.

3. Wire the breakaway switch following the wiring diagram on the reverse side of this sheet.

4. After the switch has been installed and wired in, pull the lanyard pin out of switch to make sure the brakes engage. Push the pin back into the switch until the flange on the pin is flush with the switch body. Be sure the brakes have released.

5. Do not let the lanyard cable drag on the ground. Fasten the cable to the tow vehicle frame – Not on the safety chains or the tow ball.

6. Test the breakaway switch on a regular basis. Make sure the lanyard cable is not damaged and the battery is fully charged and maintained.

7. When testing the switch, disconnect the trailer cord from the tow vehicle. Pull the lanyard pin out of the switch. This will take approximately 20 lbs. of pulling force. You should hear the brakes engage. Double check by moving the tow vehicle forward, making sure the brakes are locked and operating properly.

8. When testing is completed, re-insert the pin so it is flush with the switch body and the trailer brakes release. Reconnect the trailer cord to the tow vehicle.

9. ***DO NOT - UNDER ANY CIRCUMSTANCES – use the breakaway switch as a parking brake for the trailer! Doing so will cause the breakaway switch to melt and automatically void any warranty claim!***

Su remolque posee un interruptor breakaway ESCO. El interruptor está diseñado para actuar **solamente** cuando el remolque se separa del vehículo remolcador. Cuando ello pasa, la clavija del cable de amarre sale del interruptor breakaway. El interruptor cierra el circuito de la batería del remolque a los frenos y los acciona.

Para que el interruptor breakaway actúe adecuadamente, es importante que la batería del remolque tenga el tamaño adecuado para los frenos del remolque, que las conexiones de los terminales estén limpias, que la batería esté completamente cargada y que el interruptor se instale según el procedimiento abajo.

1. Arme el interruptor breakaway en el plano horizontal, lo más cerca posible del enganche. No debe haber ninguna tensión u obstáculo que interfiera con el cable de amarre que se conecta al vehículo remolcador. Asegúrese de que el vehículo remolcador pueda hacer curvas cerradas a la derecha y izquierda sin tensionar el cable de amarre.

2. El interruptor breakaway debe estar atornillado al bastidor del remolque por lo menos con un tornillo de 1/4" que acepte un tirón de 34 kg (75 lb) sobre el interruptor y permita que el interruptor rote.

3. Conecte el cableado del interruptor breakaway según el diagrama de cableado al reverso de esta hoja.

4. Después que el interruptor esté instalado y cableado, tire la clavija del interruptor para asegurar de que los frenos actúen. Vuelva a empujar la clavija hacia adentro del interruptor hasta que la brida de la clavija esté nivelada con el cuerpo del interruptor. Asegúrese de que los frenos se liberen.

5. No deje que el cable de amarre arrastre por el piso. Sujete el cable al bastidor del vehículo remolcador – **NO** a cadenas de seguridad o a la bola de remolque.

6. Pruebe el interruptor breakaway regularmente. Asegúrese de que el cable de amarre no esté dañado y que la batería esté completamente cargada y en buen estado.

7. Al probar el interruptor, desconecte el cable de remolque del vehículo remolcador. Tire la clavija de amarre para afuera del interruptor. Para ello, necesitará un tirón de aproximadamente 9 kg (20 lb). Debe escuchar la actuación de los frenos. Para una doble verificación, mueva el vehículo remolcador hacia adelante, asegurándose de que los frenos estén trabados y funcionando correctamente.

8. Al terminar la prueba, vuelva a insertar la clavija de manera que esté nivelada con el cuerpo del interruptor y los frenos del remolque se liberen. Vuelva a conectar el cable de remolque al vehículo remolcador.

9. ***¡JAMÁS, BAJO NINGUNA CIRCUNSTANCIA, use el interruptor breakaway como freno de mano para el remolque! ¡Ello hace que el interruptor breakaway derrita y automáticamente anula cualquier pedido de garantía!***